Layout Design With Microwind

1.

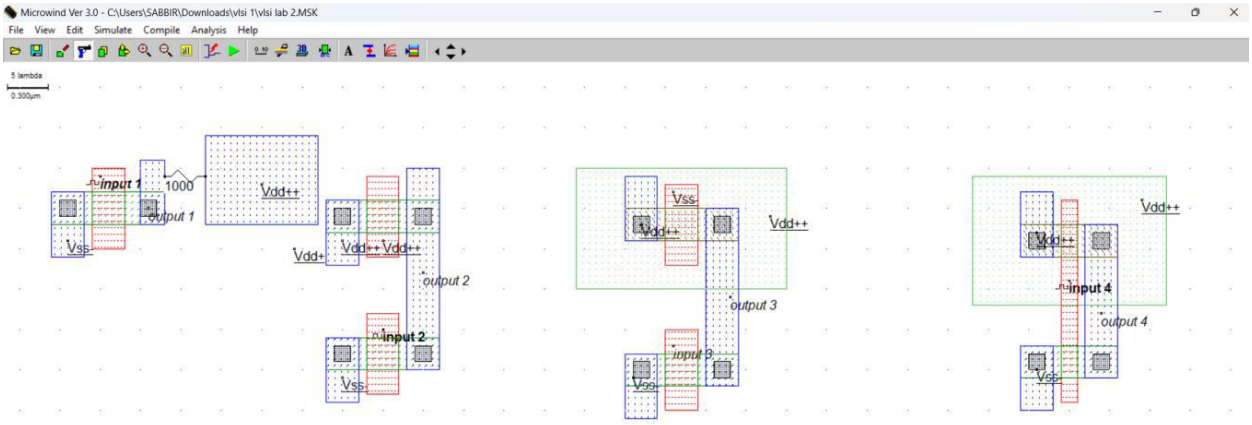

MICROWIND Design of CMOS Inverter Gate

2.

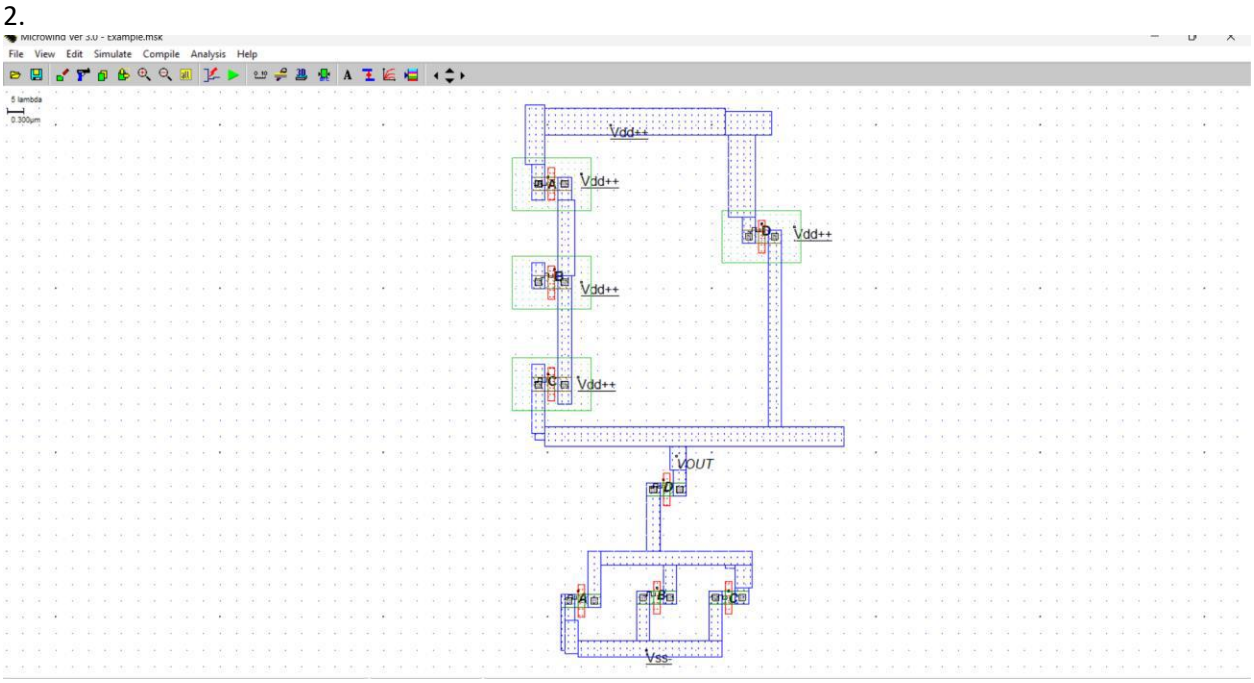

Design Layout of: $(A+B+C).\overline{\overline{\overline{D}}}$

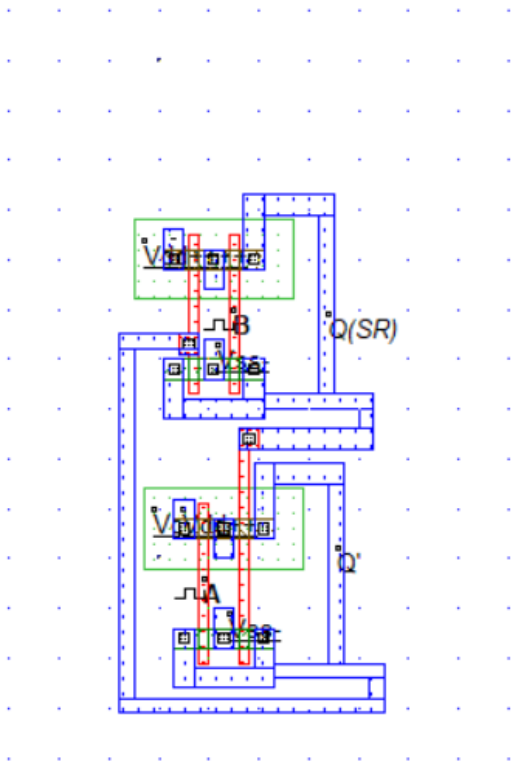

Layout of Sr latch

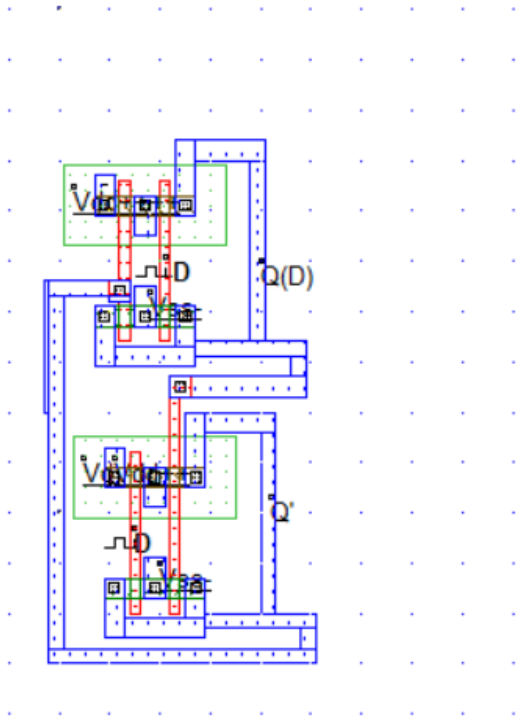

Layout Of D latch

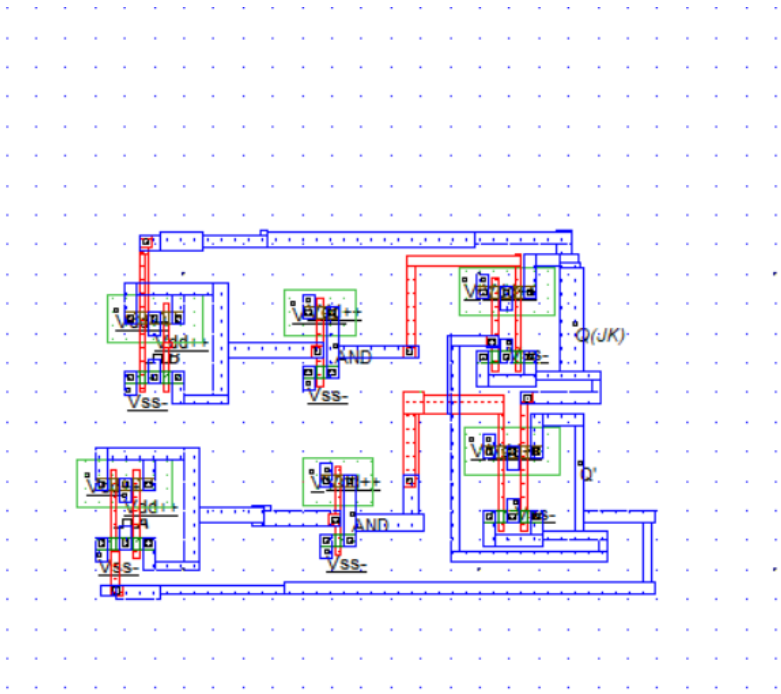

Layout of Jk latch

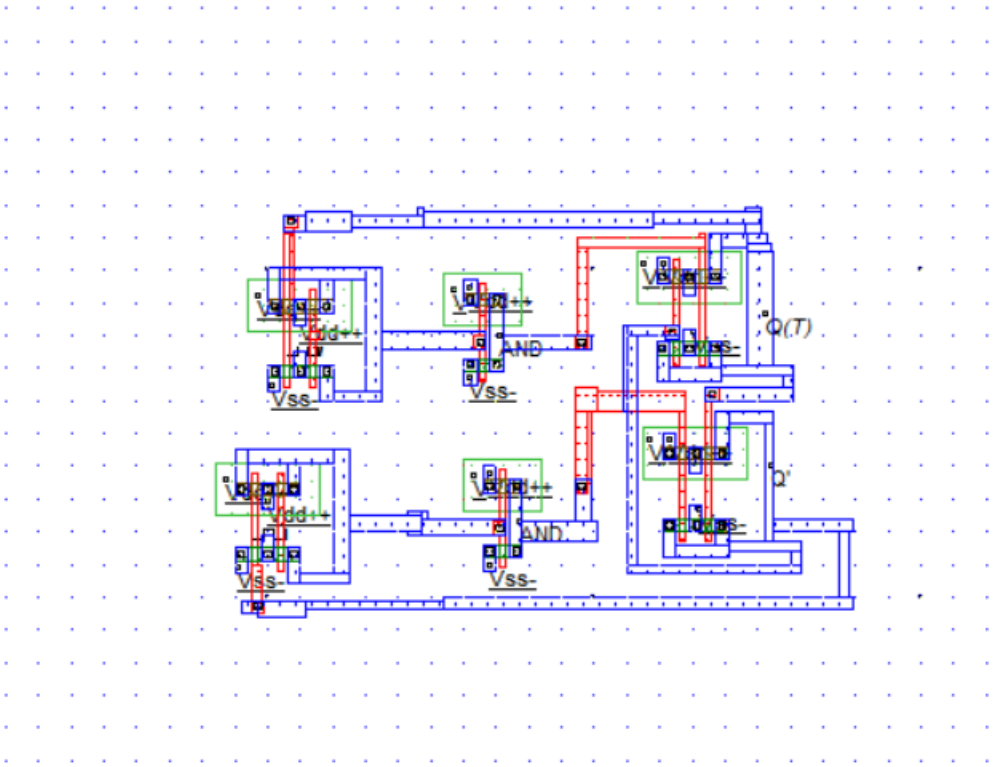

Layout of T latch

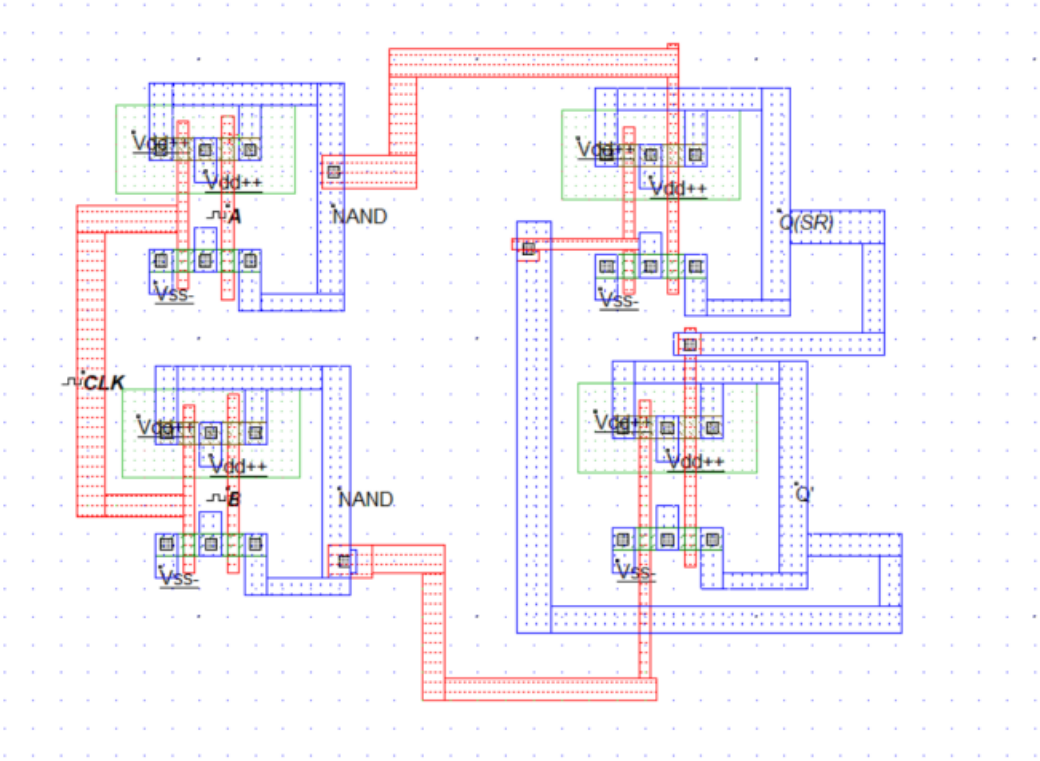

Layout of SR Flipflop

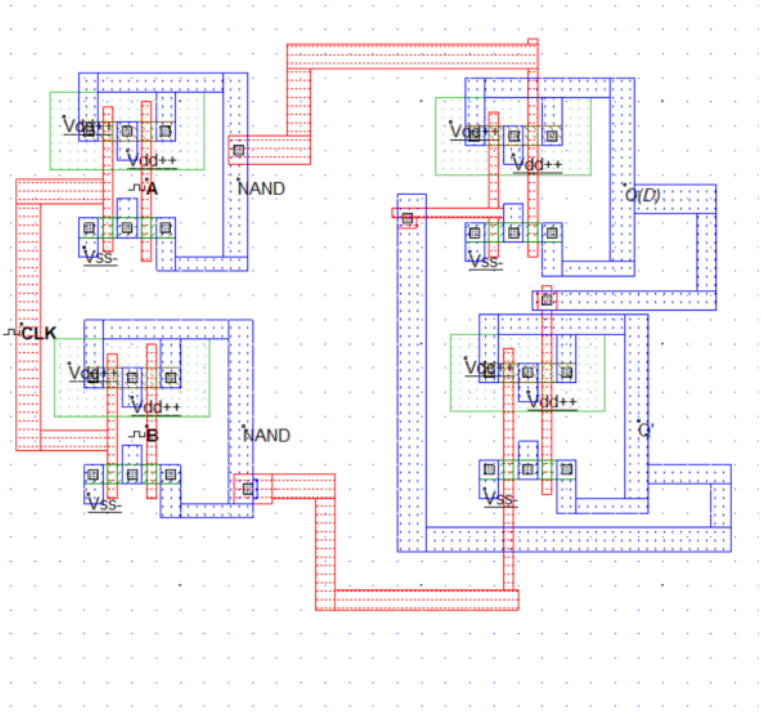

Layout of D flip flop

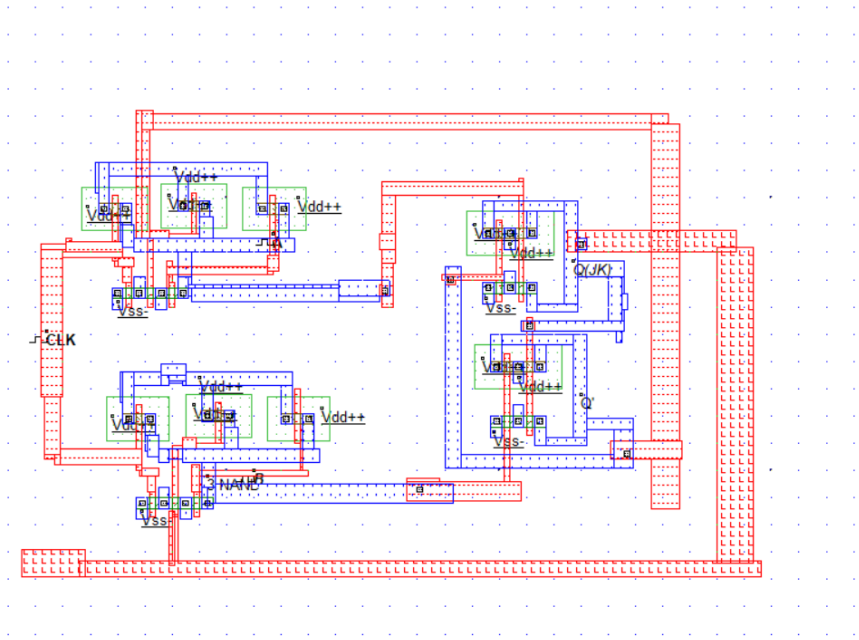

Layout of Jk flip flop

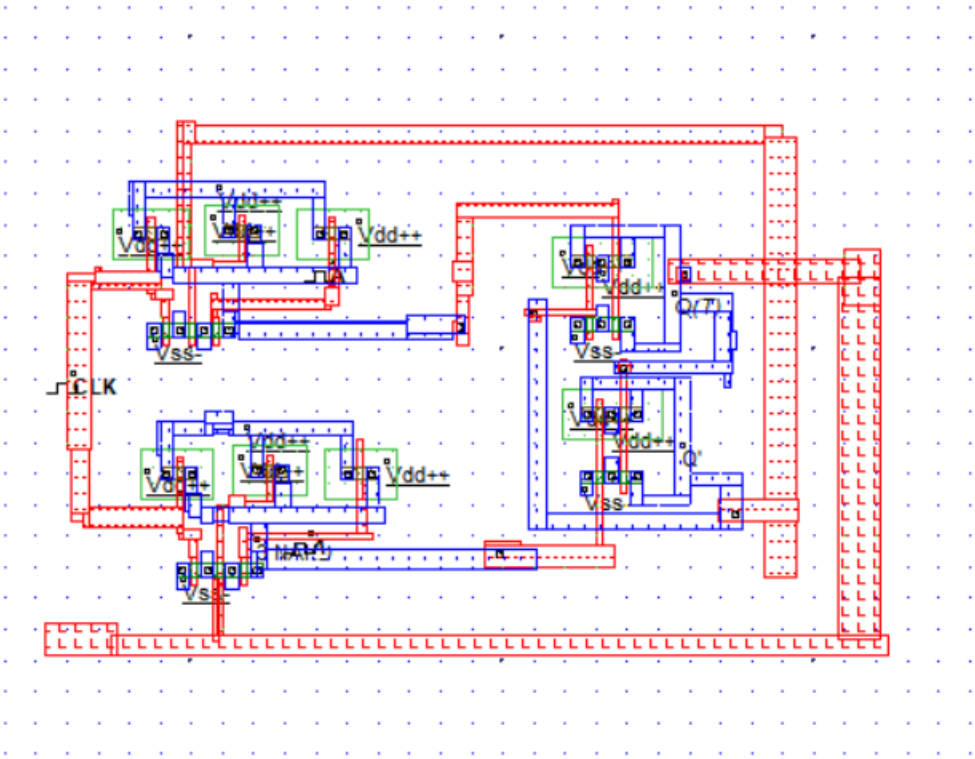

Layout of T flip flop

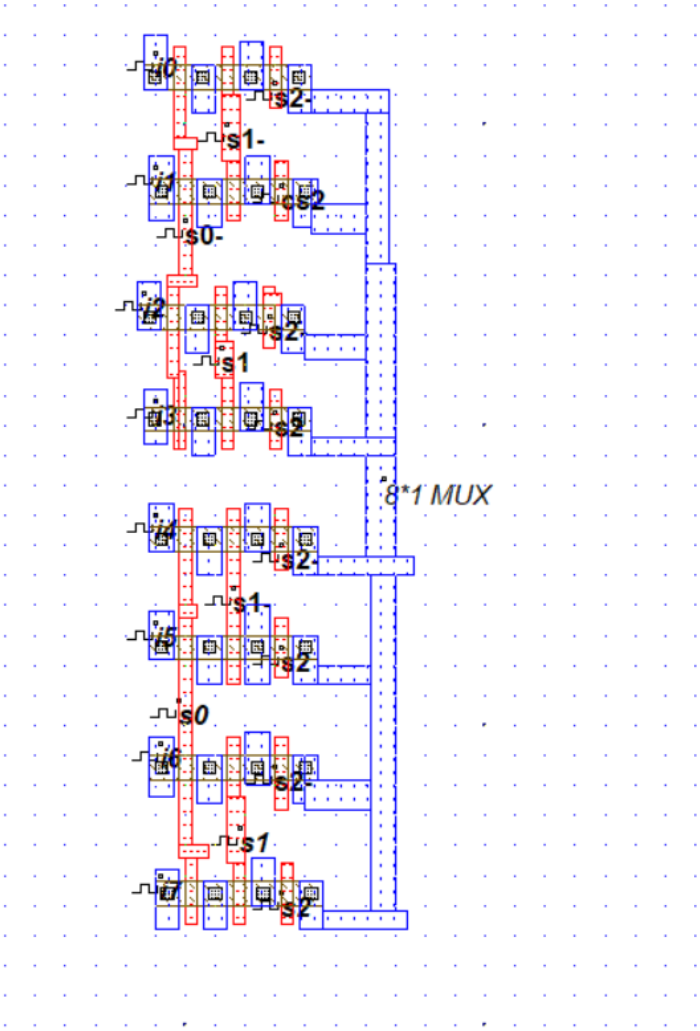

8x1 MUX Design in MICROWIND

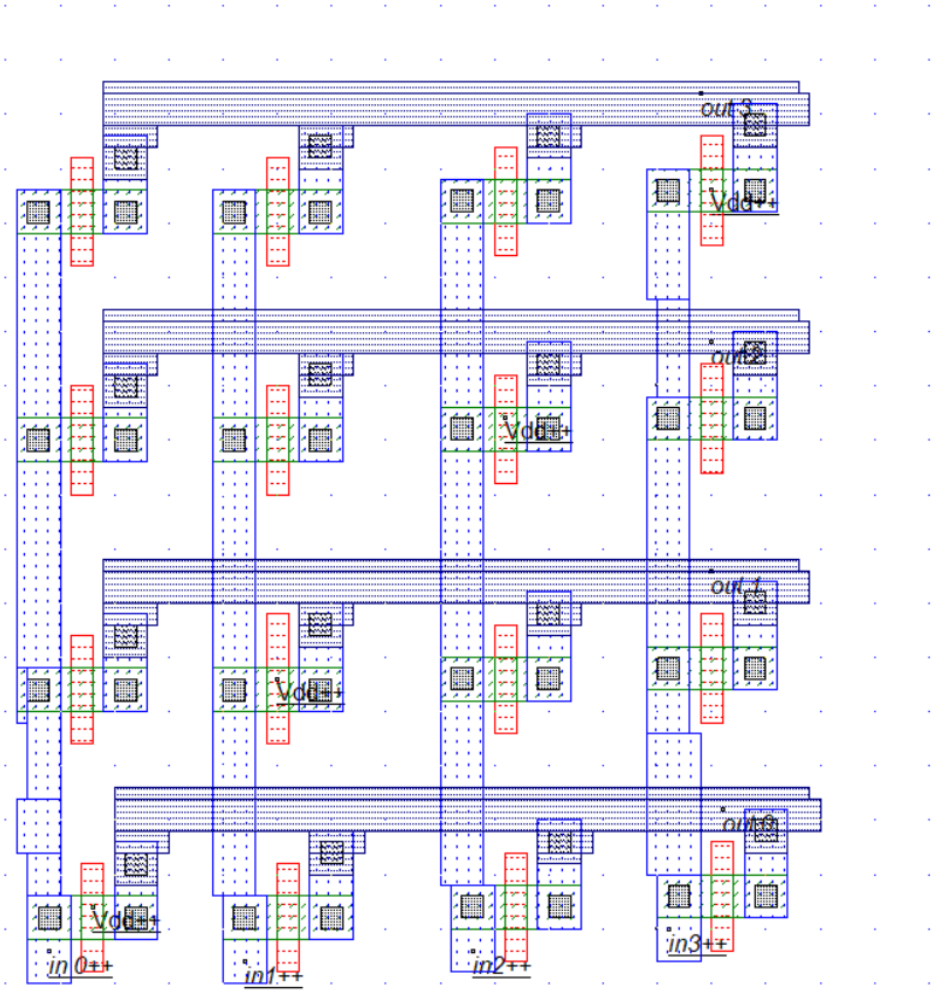

4x4 crossbar shifter

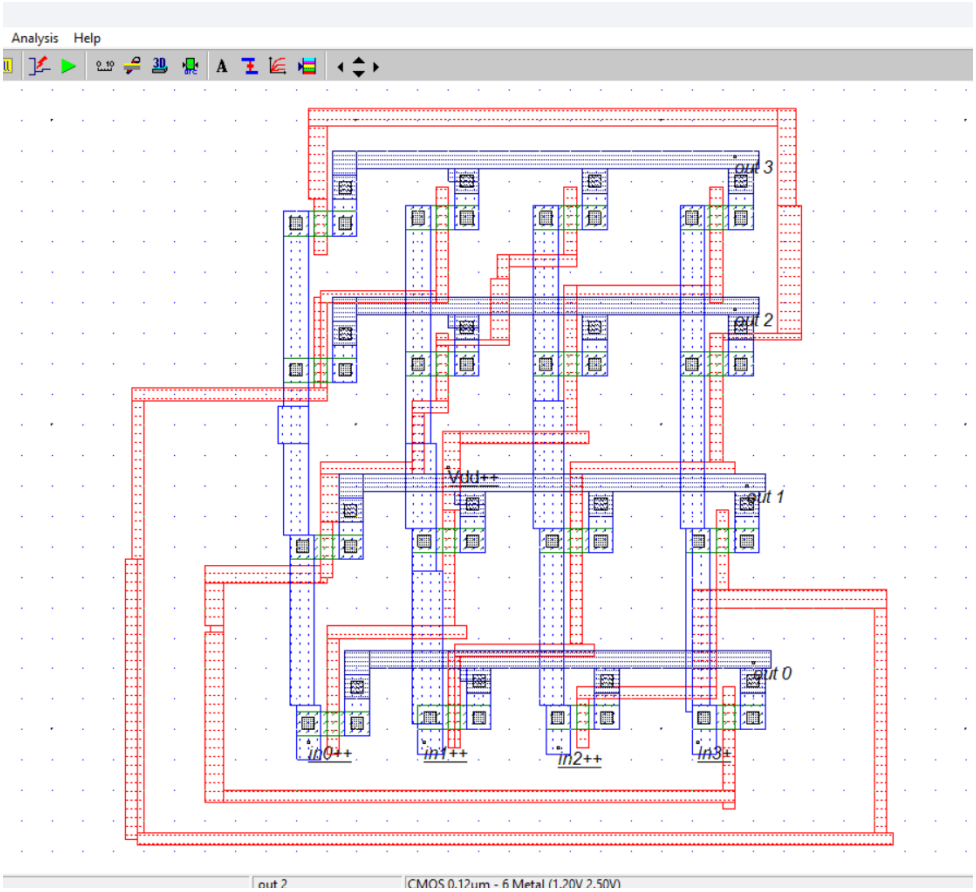

4x4 barrel shifter .

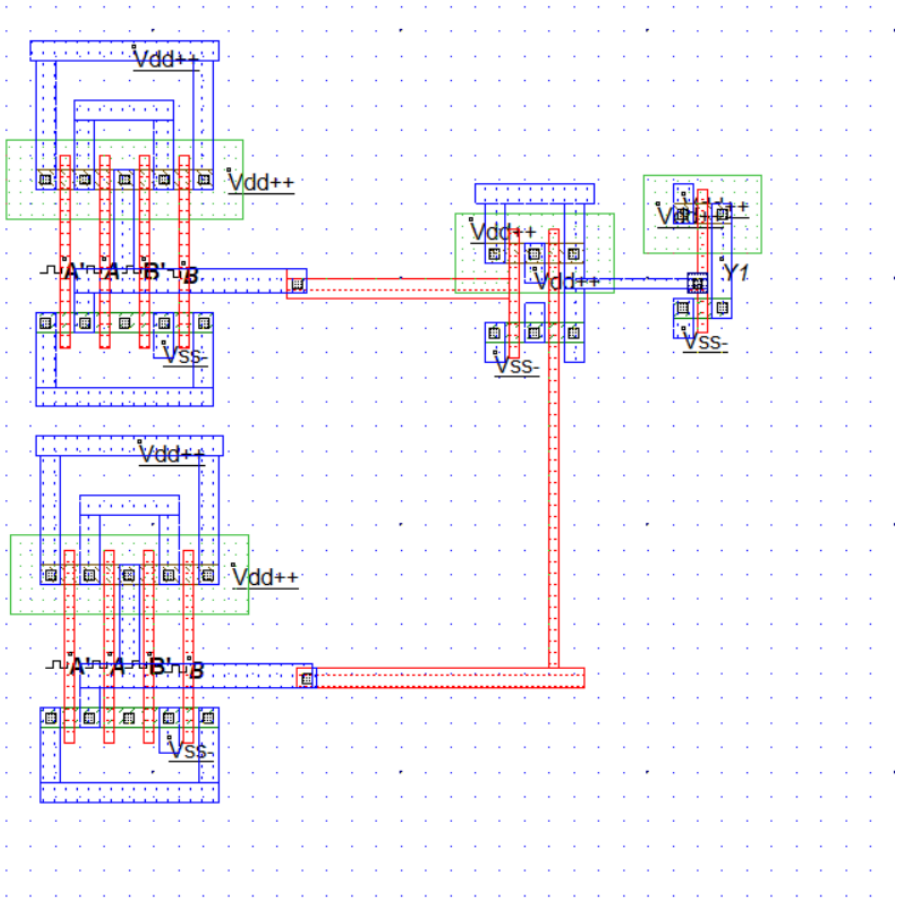
Vdd++
Vdd++
A'
A
B'
B
Vss-
Vdd++
Vdd++
Vdd++
Y1
Vss-
Vss-
Vdd++
Vdd++
A'
A
B'
B
Vss-

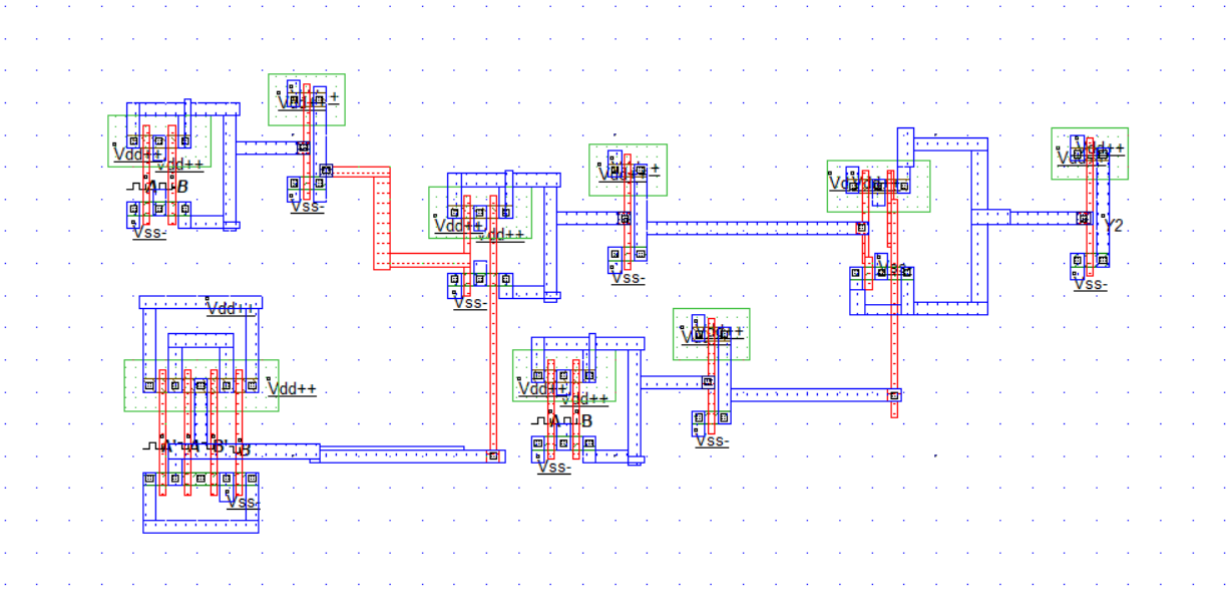
Vdd++
Vdd++
A
B
Vss-
Vss-
Vdd++
Vdd++
Vss-
Vdd++
Vss-
Vdd++
Y2
Vss-
Vdd++
Vdd++
A'
A
B'
B
Vss-
Vdd++
Vdd++
A
B
Vss-
Vdd++
Vss-

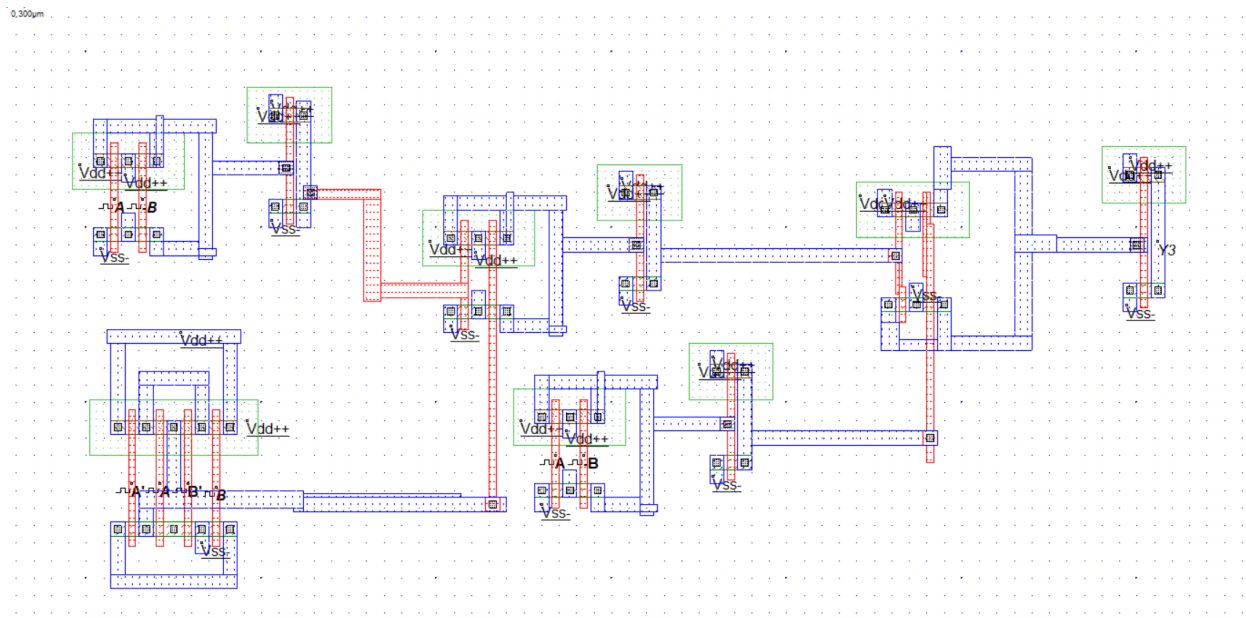
0,300µm
Vdd++
Vdd++
A
B
Vss-
Vdd++
Vss-
Vdd++
Vdd++
Vss-
Vdd++
Vss-
Vdd++
Vdd++
Vdd++